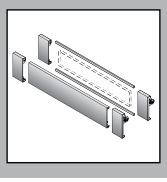

i

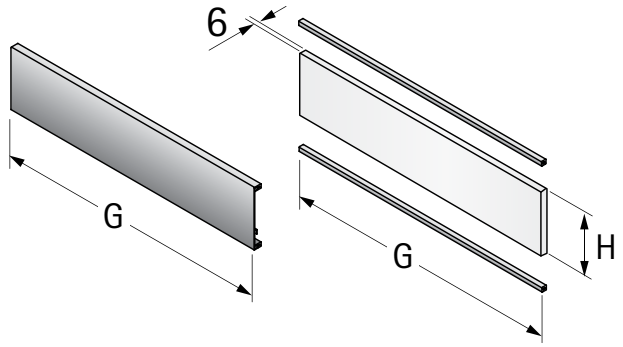

G	LB - 2 x EB - 62 mm
H	105,5 mm

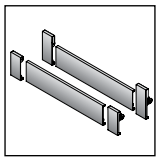

1

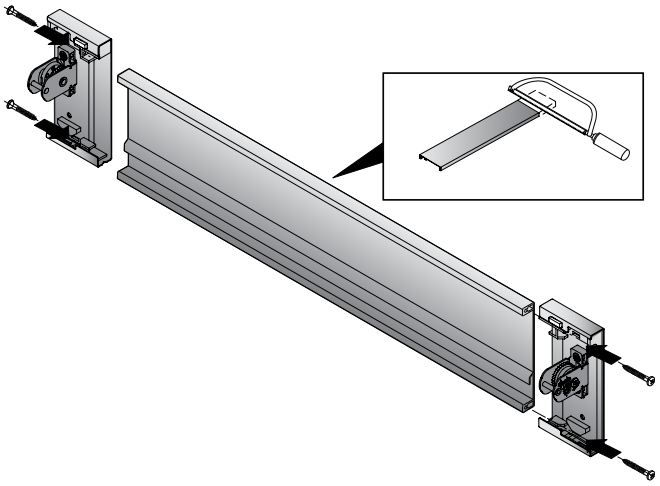

2

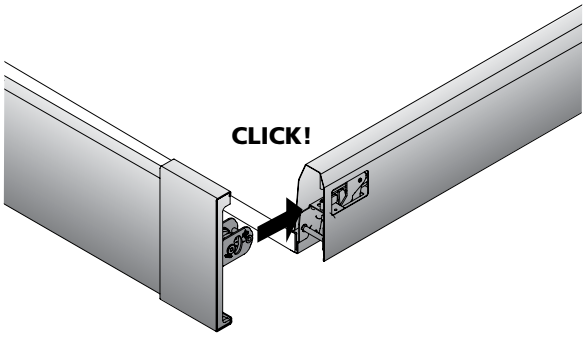

3

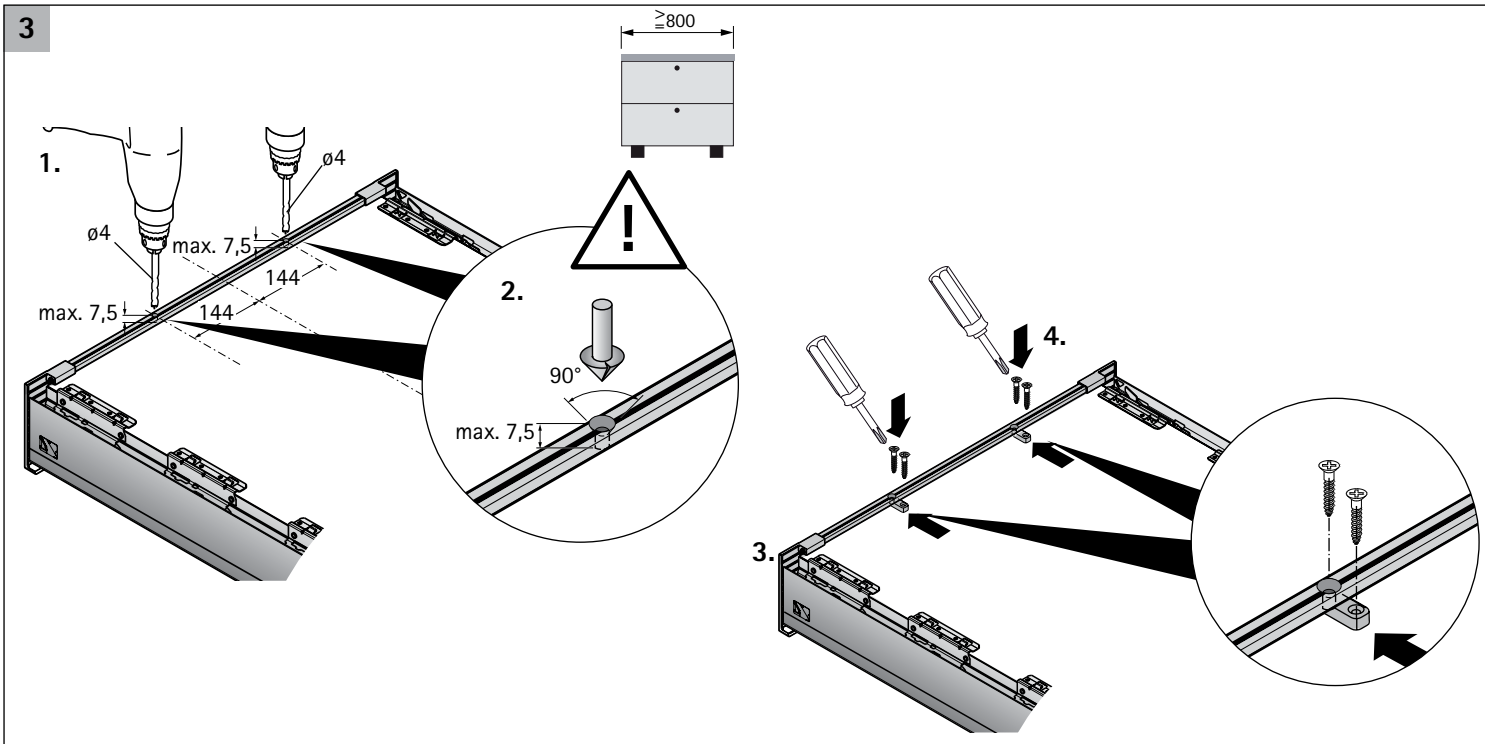

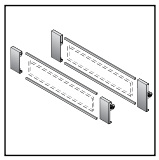

1

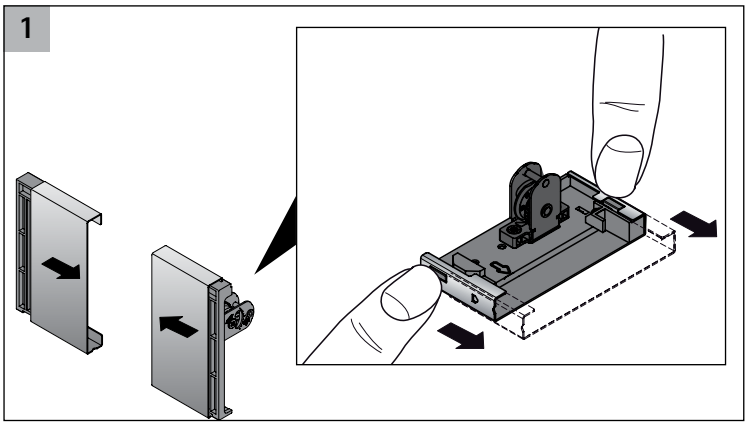

2

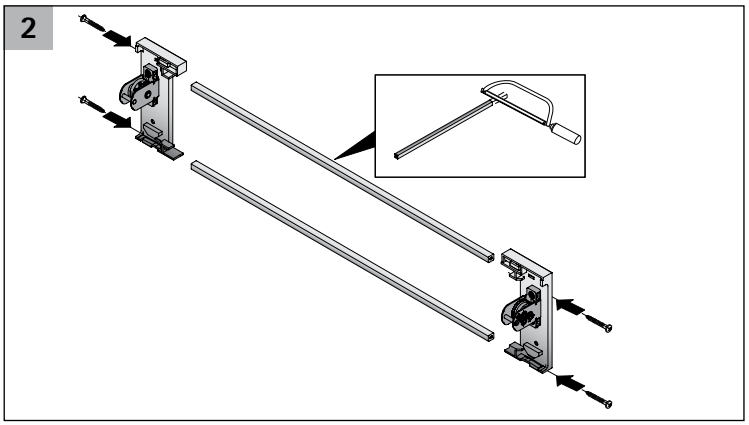

3

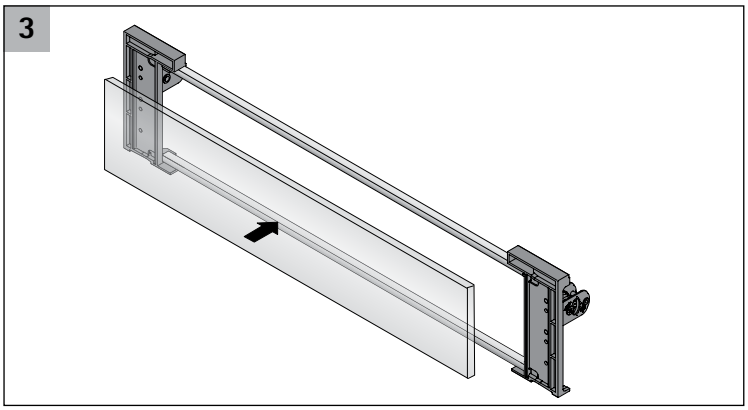

4

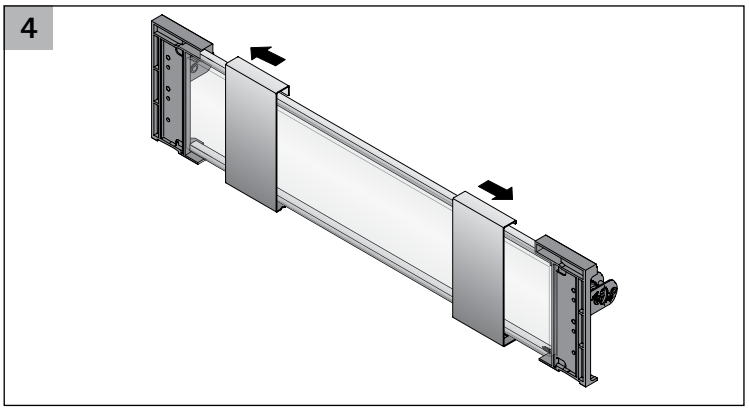

5

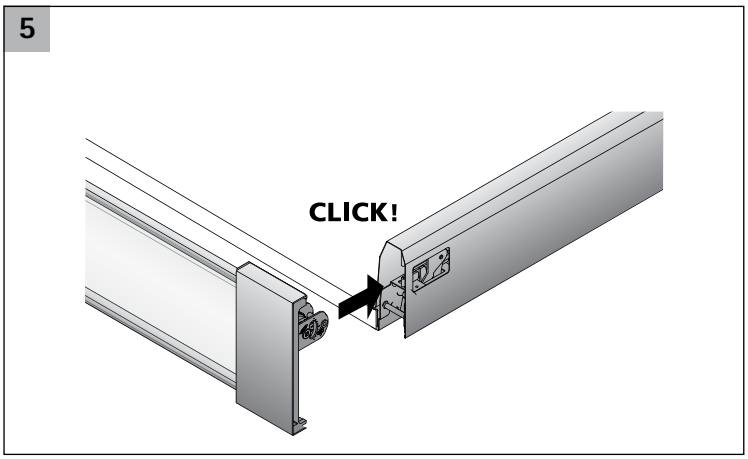

6

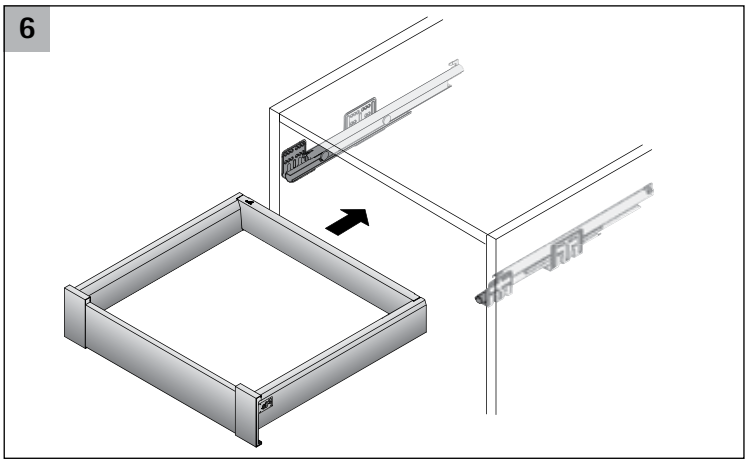

7

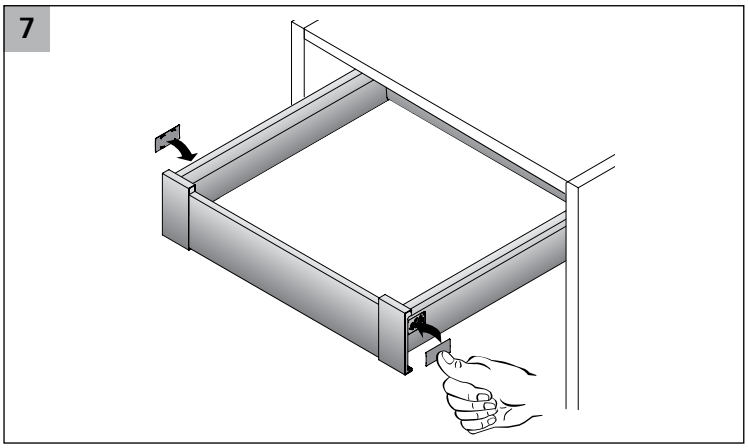
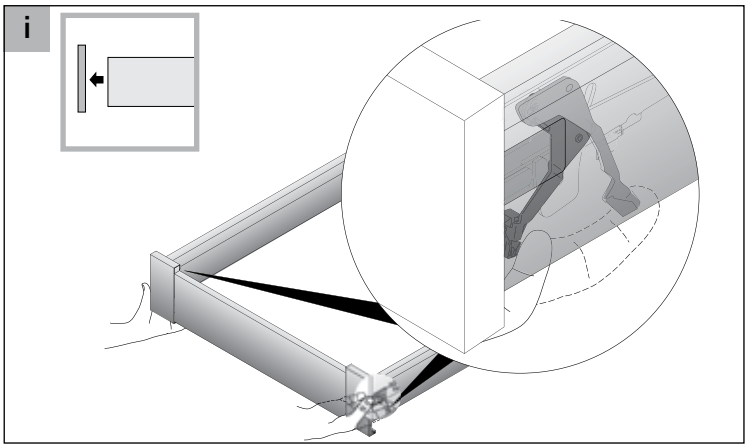
i